Play value
The stations, based on real-life situations, invite you to try them out and exercise. Alongside agility, stamina is also trained in this circuit course. The path is set up so that not all the obstacles need to be overcome and so that an accompanying person can give best possible help. Handrails on both sides at every station additionally ensure the highest safety.

Recommended for
- School children
- Young people
- Adults
- Older people
- Public play areas without supervision, such as playgrounds, parks or similar

Effect
Climbing stairs promotes stamina and mobility. Everyday challenges can be practiced in the form of various exercises. Safety in daily life is thereby improved and mobility increased.

Purpose
Everyday life can often contain hazards. Climbing stairs, descending stairs, stepping over obstacles, racing from one place to another. For a child a step can be an obstacle which is almost impossible to overcome. For older people an uneven path can pose a dangerous challenge. Those who are prepared for these hazards can master everyday life with happiness and safety. Specifically designed exercises promote mobility and make independent living easier.

Life Path
Climbing Stairs

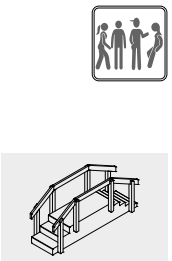

11.50400

© Richter Spielgeräte GmbH 11/22

Design Moser Spielgeräte GmbH

LudoCrea.ch GmbH — 6074 Giswil — +41 41 675 03 67 — info@ludocrea.ch

Order No. 11.50400
Life Path
Climbing Stairs

Safety distance
Device dimensions
Functional distance

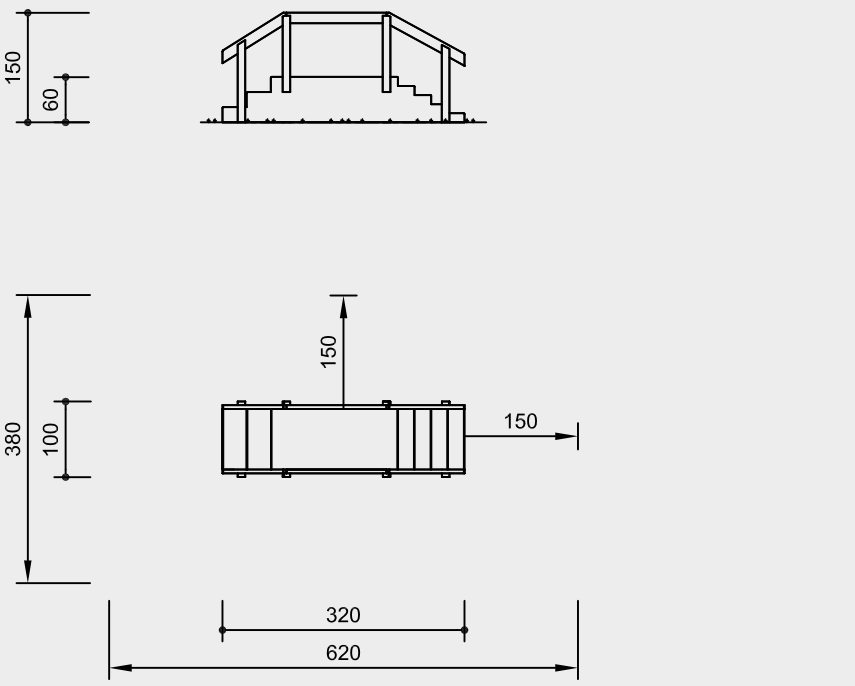

Scale 1:100

Technical information

Equipment made of non-impregnated mountain larch

Core-free
Sawn-timbers core-free, thus decreasing occurrences of cracking and undesired changes in shape

Ground anchor
All parts used for anchoring to the ground are made of hot-dip galvanised steel or stainless steel

For more detailed explanation of the quality characteristics see price list.

Dimensions
(small deviations possible)

Height	1.50 m
Length	3.20 m
Width	1.00 m
Weight	200 kg

Safety
This equipment is not playground equipment within the scope of DIN EN 1176 and therefore is also not subject to the requirements of this standard. Nevertheless, it is complied with where appropriate.

Components

1 Piece of equipment
4 Steel feet

Installation information

Surfacing requirements
corresponding to a fall height of ≤ 0.60 m
recommended: wood chips, granular material or the like

Foundations
4 items 40 x 40 x 35 cm
Excavation depth 55 cm

Attention:
Exact measurements may vary;
for all installation dimensions refer to current assembly instructions.
Technical changes reserved.

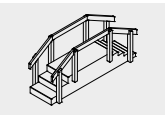

11.50400

LudoCrea.ch GmbH — 6074 Giswil — +41 41 675 03 67 — info@ludocrea.ch